231TE4L 715G3973P01W22003M

Remark: Parts position can be searched by using FIND function in PDF.

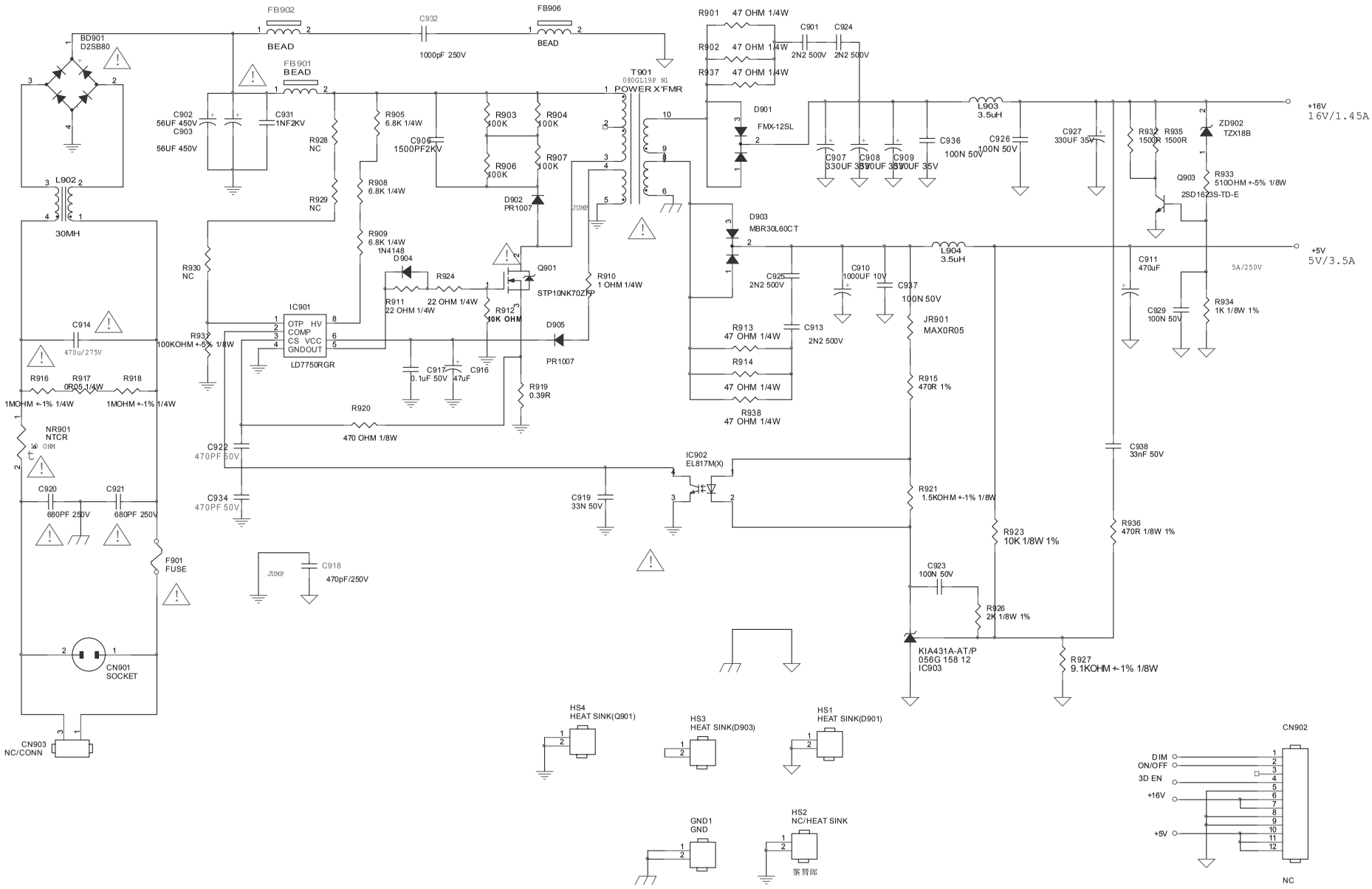

Remark: Parts position can be searched by using FIND function in PDF.
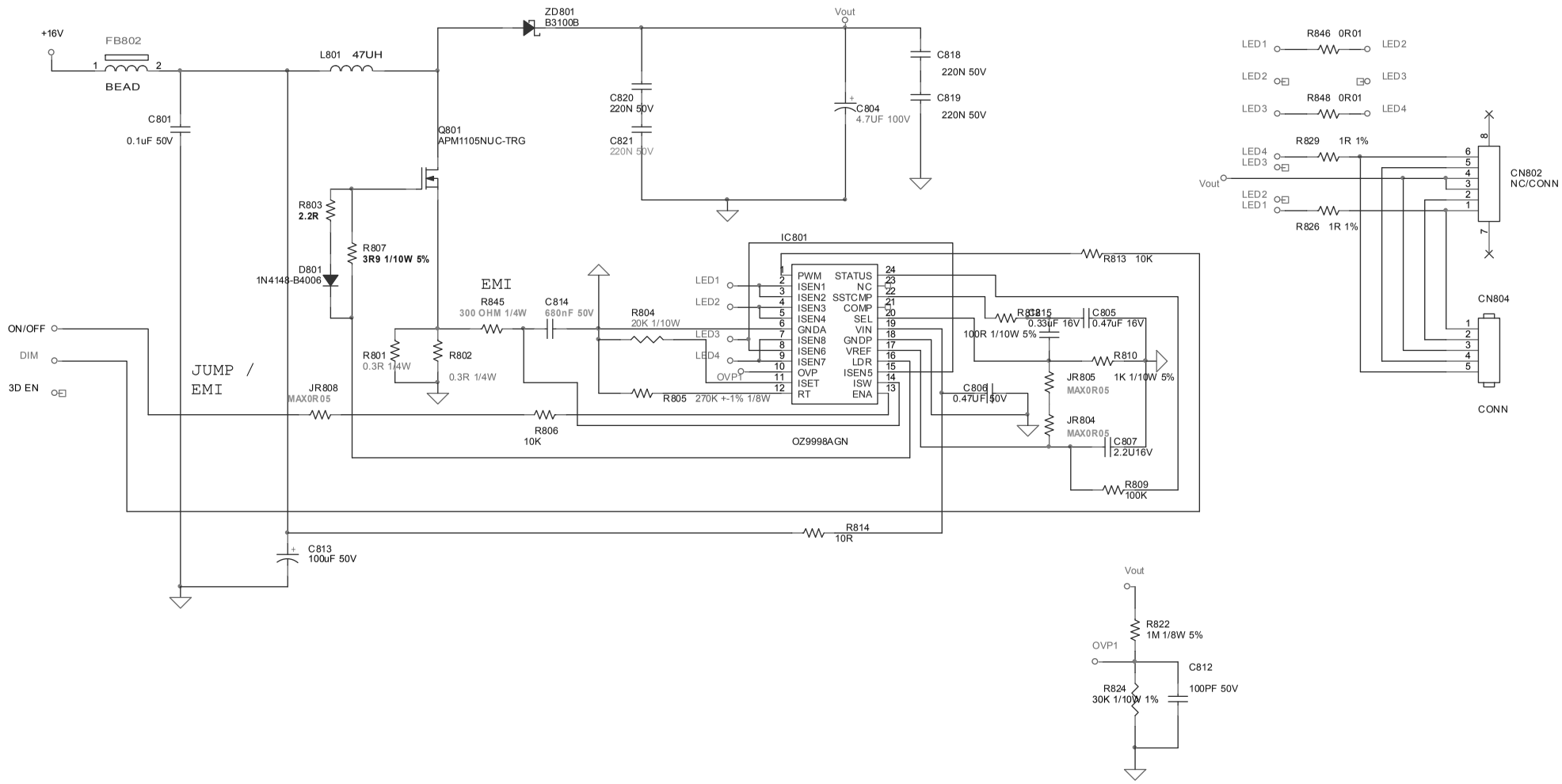
N.C